Featherwood
furnish the dreams

GeM
Government
eMarketplace

PRODUCT CATALOGUE

D's*(ng • Conference • Workstation • Reception • Storage • Chairs • Sofa

www.featherwoodfurniture.com

Featherwood

ABOUT US

WHO WE ARE

Our company believes customers want what we want-more, better, faster at a considerable price. Right from the starting to ending, we offer customers products and services better than they expected. We exist as a company to do one thing-to sell modern design office and education furnishing accessories to help people reach their full potential.

We made our renowned name in this arena by providing a range of comfortable and elegant furniture for the people to make their place glamorous and luxurious. We leverage our business model with the benefit of culture, expertise and financial resources. One of the quality in us our never to stop research on the latest market opportunities allow us to make the products that perfectly match with the latest trends and people needs.

Featherwood

OUR VISION

Featherwood furniture Pvt ltd. being one of the leading furniture firms in India are ecstatic to announce the arrival of our professionally handled furniture firm on the web platform. We believe life is something worth appreciating every moment we spend in recognizing ourselves and a big part of our identities and origin is reflected in our lifestyle and the place where we live.

OUR MISSION

We understand and value the meaning and significance of furniture as a mound in shaping what you need and what you have always wanted and are more than honored to extend our care and support for you. Based in Delhi and NCR, we have a wide spectrum ranging over all of India and are constantly working to expand our horizons. We customize and create furniture with world class machinery and well skilled artisans, according to your needs and are known to provide sophisticated yet classy furniture range.

Featherwood

WELCOME TO THE WORLD OF FEATHERWOOD FURNITURE

One Stop Office Furniture solution from the house of Featherwood Furniture is a furniture brand that promises comfort, quality and value for money coupled with full of style. Every product manufactured by Featherwood Furniture is carefully designed to lighten up your space with elegance and class.

Featherwood

Why e

ONE-STOP SOLUTIONS
OFFICE & INSTITUTIONAL FURNITURE

We provide end-to-end solutions delivery to our valued customers, including space and layout design, custom-manufacturing, supply logistics & installation with comprehensive project management.

PRODUCTIVITY
FOCUSED OFFICE DESIGN & LAYOUTS

We deploy our proven expertise in designing office & institutional spaces with core focus on maximizing productivity, enabling team collaboration & maximizing utilization of expensive commercial real estate through ergonomic workplace solutions.

VAST PRODUCT RANGE
LOADED WITH HIGH QUALITY & GREAT AFFORDABLE VALUE

Our vast product range includes Desking, Seating, Workstations, Partitions, Conference / Lounge / Dining / Front Office / Auditorium / Education / Hospital Furniture, Library Racks, Storage & Utilities. All this & more, manufactured in world class quality at affordable cost & professional supply standards.

EXPERTISE IN
SMALL AND MEDIUM ENTERPRISE

We understand the needs of SME business enterprises extremely well and provide personalized comprehensive solutions from consultation & design to custom manufacturing to installation to after-sale services.

EXTENSIVE
WARRANTY & SERVICES SUPPORT

Besides one-stop project delivery and installation handover on time, we provide minimum One year onsite warranty and services support for all our product range, backed by an expert in-hou se team of trained engineers and technicians.

O LAST with stringent quality controls , modern technology , resistance to corrosion by termites , fungus , etc. our product are built to last. When it comes to durable and stylish home furniture Featherwood Furniture is a smart choice.

ANT each Featherwood Furniture Products comes with a finishing layer that protects it from moisture and water resistant.

FUNGUS AND TERMITE PROOF We understand that you invest very carefully in home furniture hence, for long-lasting results Featherwood Furniture products are fungus and termite resistant.

ARRANTY Our product are liable for a 3 year warranty as per usage & terms and conditions. 1 year warranty on traded product

SOFT EDGES Your kids safety if your priority that's why we craft our product with edges that are smooth and blunt. So you stay carefree

CE Our designers have crafted each unit to ensure that your kid's playtime does not get hampered.

Featherwood

CERTIFICATES

Featherwood

CERTIFICATES

THE NATIONAL SMALL INDUSTRIES CORPORATION LIMITED

STORE DETAILS CERTIFICATE

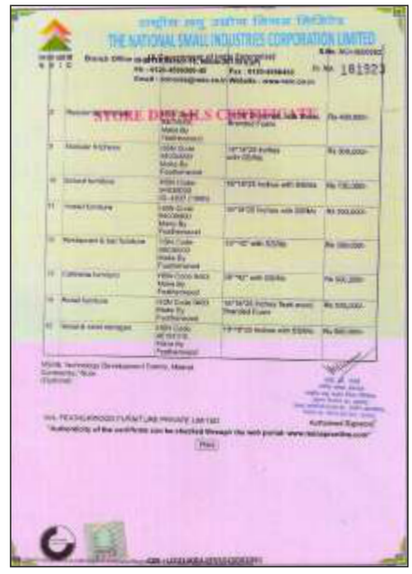
THE NATIONAL SMALL INDUSTRIES CORPORATION LIMITED

STORE DETAILS CERTIFICATE

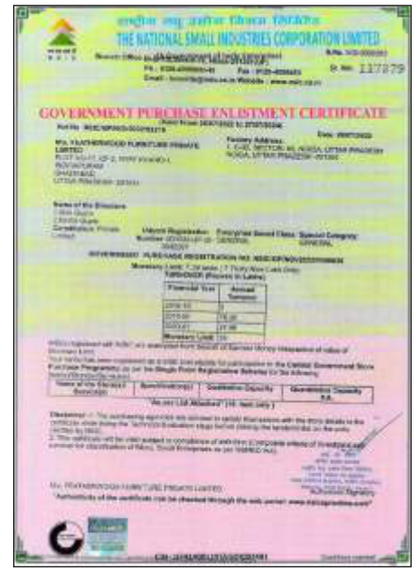
THE NATIONAL SMALL INDUSTRIES CORPORATION LIMITED

GOVERNMENT PURCHASE ENLISTMENT CERTIFICATE

Zertifikat ☆ Certificaat ☆ Certificato ☆ Сертификат ☆ شهادة

CERTIFICATE

This is to certify that the management system of

FEATHER WOOD FURNITURE PRIVATE LIMITED

has been formally assessed by

Star Certifications UK Limited

and found to comply with the requirements of

ISO 45001: 2018

(Occupational Health and Safety Management System)

Registered Site (s):

N K P -17, GF -2, Indirapuram, Ghaziabad, Uttar Pradesh-201014, India.

Scope of Certification

Manufacturing & Supply of Customized and Educational Furniture for School, Bunk Bed, Work-Station, Free Space, Residential, Modular Kitchen, Decorative Wall Cabinets & Execution of Turnkey Interior Project.

:: Certificate No :: SR/1850640/2023

Date of initial registration: 21 November 2023
Re-certification Due: 20 November 2026

1st Surveillance Audit : 21 October 2024
2nd Surveillance Audit: 21 October 2025

This Certificate is property of Star Certifications UK Ltd. and remains valid subject to satisfactory surveillance audits.

To check validity of the certificate please visit at www.stariso.co.uk

Certification Director
Star Certifications UK Limited.
KEMP HOUSE, 160 CITY ROAD, EC1V 2NX
LONDON, UNITED KINGDOM

This certification of registration is issued by Star Certifications UK Limited accredited with Accreditation Board For Certification bodies (www.abcb.org).

This certificate remains the property of Star Certifications UK Limited and must be returned upon request

Zertifikat ☆ Certificaat ☆ Certificato ☆ Сертификат ☆ شهادة

CERTIFICATE

This is to certify that the management system of

FEATHER WOOD FURNITURE PRIVATE LIMITED

has been formally assessed by

Star Certifications UK Limited

and found to comply with the requirements of

ISO 13485:2016

(Medical Devices - Quality Management Systems)

Registered Site (s):

N K P -17, GF -2, Indirapuram, Ghaziabad, Uttar Pradesh-201014, India.

Scope of Certification

Manufacturing and Supply of Customized and Modular Furniture for Office, Educational Furniture for Schools, Colleges, Universities, Dual Desk Bench, Bunk Bed, Work Station, Free Space, Residential Furniture, Modular Kitchen, Decorative Wall Cabinets and Execution of Turnkey Interior Project.

:: Certificate No :: SR/1854728/2023

Date of initial registration: 22 November 2023
Re-certification Due: 21 November 2026

1st Surveillance Audit : 22 October 2024
2nd Surveillance Audit: 22 October 2025

This Certificate is property of Star Certifications UK Ltd. and remains valid subject to satisfactory surveillance audits.

To check validity of the certificate please visit at www.stariso.co.uk

Certification Director
Star Certifications UK Limited.
KEMP HOUSE, 160 CITY ROAD, EC1V 2NX
LONDON, UNITED KINGDOM

This certification of registration is issued by Star Certifications UK Limited accredited with Accreditation Board For Certification bodies (www.abcb.org).

This certificate remains the property of Star Certifications UK Limited and must be returned upon request

Zertifikat ☆ Certificaat ☆ Certificato ☆ Сертификат ☆ شهادة

CERTIFICATE

This is to certify that

FEATHER WOOD FURNITURE PRIVATE LIMITED

has been formally assessed by

Star Certifications UK Limited

and found to comply with the requirements of

GREEN PRO

(Green Product Certification)

Product of Company found eligible to be Certified as Green pro & can be used for Production & Marketing as per Test Report Produced by the Company.

Registered Site (s):

N K P -17, GF -2, Indirapuram, Ghaziabad, Uttar Pradesh-201014, India.

Categories of Product:

Manufacturing and Supply of Customized and Modular Furniture for Office, Educational Furniture for Schools, Colleges, Universities, Dual Desk Bench, Bunk Bed, Work Station, Free Space, Residential Furniture, Modular Kitchen, Decorative Wall Cabinets and Execution of Turnkey Interior Project.

:: Certificate No :: SR/1855950/2023

Date of initial registration: 22 November 2023
Re-certification Due: 21 November 2026

1st Surveillance Audit : 22 October 2024
2nd Surveillance Audit: 22 October 2025

This Certificate is property of Star Certifications UK Ltd. and remains valid subject to satisfactory surveillance audits.

To check validity of the certificate please visit at www.stariso.co.uk

Certification Director
Star Certifications UK Limited.
KEMP HOUSE, 160 CITY ROAD, EC1V 2NX
LONDON, UNITED KINGDOM

This certification of registration is issued by Star Certifications UK Limited accredited with Accreditation Board For Certification bodies (www.abcb.org).

This certificate remains the property of Star Certifications UK Limited and must be returned upon request

Certificate of Registration

UK GLOBAL

Certificate awarded to

FEATHERWOOD FURNITURE PVT. LTD.

GF-1, PLOT NO. 17, NYAY KHAND - 1, INDIRA PURAM, GHAZIABAD - 201014, UTTAR PRADESH, INDIA

It is certified that the System of the above organisation has been assessed independently and found the product are in compliance with the requirement of

Level® 1 Certified
ANSI/BIFMA e3-2014e
Furniture Sustainability Standard
For Product

MANUFACTURING & SUPPLY OF CUSTOMIZED AND MODULAR FURNITURE, OFFICE FURNITURE, SCHOOL FURNITURE, WORK-STATION, FREE SPACE FURNITURE, RESIDENTIAL FURNITURE, MODULAR KITCHEN, DECORATIVE WALL CABINETS & EXECUTION OF TURNKEY INTERIOR PROJECT.

Certificate Number: UQ-2248

Validity of this certificate can be verified at www.ukglobal.uk

Authorised Signatory

Premium
Series

GeM
Government
eMarketplace

Featherwood

Byron 1

Sun 1

Altona 1

Nectar 1

Nectar 2

Nectar 3

Kessel 1

Kessel 2

Kessel 3

Kessel 4

Kessel 5

Kessel 6

Kessel 7

Premium
Series

GeM
Government
eMarketplace

Featherwood

Azure 1

Azure 2

Rome 1

Rome 2

Rome 3

Civic 1

Civic 2

Civic 3

Capital 1

Capital 2

Capital 3

Dixon 1

Dixon 2

Dixon 3

Eleganza 1

Eleganza 2

Eleganza 3

Eleganza 4

Eleganza 5

Eleganza 6

Gold
Series

GeM
Government
eMarketplace

Featherwood

Royal 1

Vision 1

Regent 1

Regent 2

Regent 3

Recliner 1

Recliner 4

Recliner 5

Stanford 1

Stanford 2

Orion 1

Orion 2

Karizma 1

Karizma 2

Contour 1

Contour 2

Nucas 4

Nucas 5

Nucas 6

Gold
Series

GeM
Government
eMarketplace

Featherwood

Ibex 1

Ibex 2

Ibex 3

Flow 1

Flow 2

Delta 1

Delta 2

Abro 1

Abro 2

Trinity 1

Trinity 2

Trinity 3

Rio 1

Rio 2

Rio 3

Jupiter 1

Jupiter 2

Jupiter 3

Montena 1

Montena 2

Montena 3

Plasma 1

Plasma 2

Plasma 3

Gold
Series

Featherwood

GeM
Government
eMarketplace

Signature 1

Signature 2

Cherish 1

Cherish 2

Cross 1

Cross 2

Vortex 1

Vortex 2

Edge 1

Edge 2

Laurel 1

Ardent 1

Sara-2

Sara-3

Derby 2

Hampton 3

Hampton 4

President
Series

Art As An Asset Class

The President chairs collection stands out bold and imposing with its distinctive design and premium upholstery. The exquisite premium upholstery is carefully produced with great attention to details and ensures the ultimate in comfort when sitting. The generous size, unmatched comfort, loaded with various features, the President series collection is clearly a pride possession for any office.

GP 101

GP 102

GP 103

GP 104

GP 105

GP 106

GP 109

GP 110

GP 110 A

GP 111

GP 112

GP 112 A

GP 113

GP 114

GP 115

GP 116

GP 117

GP 117 A

President
Series

GeM
Government
eMarketplace

Featherwood

GP 133

GP 134

GP 138 A

GP 139 A

GP 140

GP 147

GP 148

GP 153

GP 154

GP 155

GP 156

GP 157

GP 158

GP 159

GP 160

GP 161

GP 162

GP 163

GP 164

GP 165

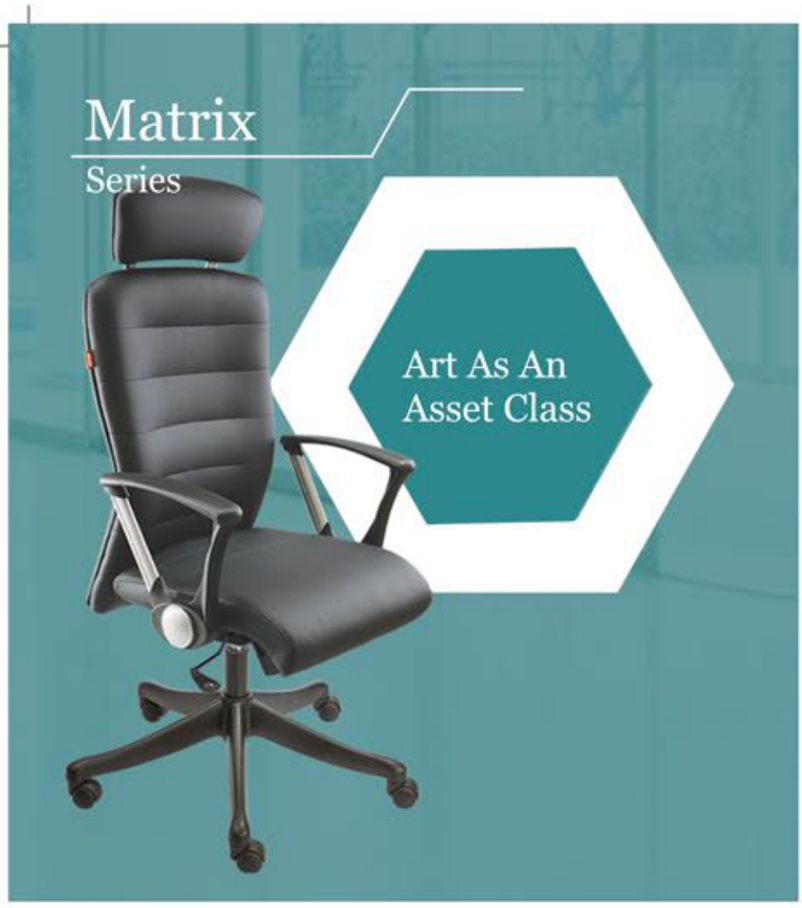

Featherwood

The matrix range of chairs are built for constant use with a host of ergonomic features that facilitate all day comfort and to enhance the pleasure of working and productivity.

GM 214

GM 215

GM 216

GM 220

GM 221

GM 222

GM 223

GM 224 A

GM 225 A

GM 226 A

GM 230

GM 231

GM 232

GM 233

GM 242

GM 243

GM 244

GM 245

GM 246

GM 247

GM 248

GM 253

Sleek
Series

Art As An Asset Class

Featherwood

The visually stunning Sleek chair collection provides new levels of comfort and support that suits the ergonomic need of each individual user. Designed for both style conscious executives and for challenging 24 hours environments that require added comfort and durability.

GS 339

GS 340

GS 341

Sleek
Series

GeM
Government
eMarketplace

Featherwood

GS 301

GS 302

GS 303

GS 304

GS 308

GS 309

GS 310

GS 311

GS 312

GS 318

GS 319

GS 320

GS 321

GS 322

GS 323

GS 334

GS 335

GS 336

GS 349

GS 350

GS 351

GS 356

GS 357

GS 358

Bliss
Series

Featherwood

Art As An Asset Class

The Bliss office chair is considered the most dynamic, timeless and at the same time most comfortable office chair. It stimulates body and mind and is relaxing at the same time.

GB 401

GB 402

GB 403

GB 404

GB 405

GB 406

GB 407

GB 408

GB 409 A

GB 410

GB 411

GB 412

GB 413

GB 414

GB 415

GB 416

GB 417

Astra
Series

Featherwood

Art As An
Asset Class

With its clean, modern styling, Astra series is guaranteed to provide a contemporary feel to any office environment due to the multifunction and ergonomic design of the chair. The sculptured foam seat combines with the breathable mesh to keep user cool and comfortable.

GA 562

GA 563

GA 5003

GA 5004

GA 5005

GA 5006

GA 5007

GA 5014

GA 5015

GA 5017

GA 501C

GA 502C

GA 502A

GA 505

GA 512 A

GA 513 A

Astra
Series

GeM
Government
eMarketplace

Featherwood

GA 516 C

GA 517

GA 517 A

GA 518

GA 520 A

GA 521

GA 522

GA 526 A

GA 528

GA 529

GA 533

GA 534

GA 535

GA 535 A

GA 538 A

GA 550 A

GA 551 A

GA 553 A

GA 559

GA 564 A

GA 565 A

GA 566 A

GA 568

GA 569

GA 570

GA 571

GA 577

GA 579

GA 580

GA 581

GA 582

GA 583

GA 585

GA 586

GA 587

GA 588

GA 591

Visitor
Series

Featherwood

Art As An Asset Class

The elegantly shaped, Aluminium frame and the contours of the seat and back lend the four-leg chair the appeal of high-quality office seating. Its ergonomic comfort and sophisticated functionality ensure that the people sitting on the other side of the desk are equally important.

GV 601

GV 603

GV 604

GV 606

GV 607 A

GV 614

GV 615

GV 616

GV 618

GV 619

GV 620

GV 621

GV 625

GV 626

Workstation
Series

Featherwood

Art As An Asset Class

The Workstation chairs are designed so well that they deliver exceptional comfort to the body, despite sitting on it for hours together keep you and work spaces energised whole day.

GW 702

GW 703

GW 704 A

GW 705 A

GW 707 A

GW 708

GV 713 A

GW 716

GW 717

GW 718 A

GW 728

GW 732

GW 735

Modular
Series

GeM
Government
eMarketplace

Featherwood

Manhattan -1
W 3000 X D 1200 X H 750
W 2400 X D 1200 X H 750

Proxima -1
W 2650 X D 2200 X H 750

Tiara -1
L 2700 X D2300 X H750

Accent -1
W 2400 X D 2000 X H 750

Accent -2
W 2400 X D 1200 X H 750

Senator -1
L 2000 X D2300 X H750

Burg
W 2500 X D 2000 X H 750

Interact -1
W 2300 X D 2000 X H 750

Interact -2
W 3600 X D 1400 X H 750

Interact -3
W 3100 X D 2400 X H 750

Evoke -1
W 2400 X D 2100 X H 750

Modular
Series

GeM
Government
eMarketplace

Featherwood

Evoke -2
W 2200 X D 1850 X H 750

Evoke -3
W 2200 X D 1850 X H 750

EVOKE - 4 (Complete unit)
W 2250 x D 450 x H 2200
EVOKE - 5 (Centre unit)
W 750 x D 450 x H 2200
EVOKE - 6 (End unit)
W 750 x D 450 x H 2200

Evoke -7
W 2200 X D 1850 X H 750

Evoke -8
W 2200 X D 1850 X H 750

EVOKE - 9 (Complete unit)
W 2250 x D 450 x H 2200
EVOKE - 10 (Centre unit)
W 750 x D 450 x H 2200
EVOKE - 11 (End unit)
W 750 x D 450 x H 2200

Parco -1
W 1500 X D 1200 X H 750

Parco -2
W 3600 X D 1200 X H 750

Parco -3
W 2400 X D 1200 X H 750

Stelo -1
L 1800 X D1800 X H750

Stelo -3
L 2400 x D 1200 X H 750

Rave -1
L 1650 X D 1750 X H 750
L 1800 X D 1750 X H 750

Modular
Series

GeM
Government
eMarketplace

Featherwood

Broadway
L 2750 x D 2330 x H 750
L 2450 x D 2330 x H 750

Rex
L 2700 x D 1840 x H 750
L 2400 x D 1840 x H 750

Oxford
L 1900 x D 1400 x H 750
L 1600 x D 1400 x H 750

Victory
L 2100(300+1800) x D1650 x H 750
L 1800(300+1500) x D1650 x H 750

DIRECTOR DESK

Featherwood

Product Code: FFDD-001

A-L-1500, D-750, H-750

B-L-1800, D-900, H-750

Featherwood

DIRECTOR DESK

Product Code: FFDD-002

A-L-1500, D-750, H-750
B-L-1800, D-900, H-750

DIRECTOR DESK

Featherwood

Product Code: FFDD-003

A-L-1500, D-750, H-750
B-L-1800, D-900, H-750

Featherwood

DIRECTOR DESK

Product Code: FFDD-004

A-L-1500, D-750, H-750
B-L-1800, D-900, H-750

DIRECTOR DESK

Featherwood

Product Code: FFDD-005

A-L-1500, D-750, H-750
B-L-1800, D-900, H-750

Featherwood

DIRECTOR DESK

Product Code: FFDD-006
A-L-1500, D-750, H-750
B-L-1800, D-900, H-750

Product Code: FFDD-007
A-L-1500, D-750, H-750
B-L-1800, D-900, H-750

DIRECTOR DESK

Featherwood

Product Code: FFDD-008
A-L-1500, D-750, H-750
B-L-1800, D-900, H-750

Product Code: FFDD-009
A-L-1500, D-750, H-750
B-L-1800, D-900, H-750

Featherwood

DIRECTOR DESK

Product Code: FFDD-010
A-L-1500, D-750, H-750
B-L-1800, D-900, H-750

Product Code: FFDD-011
A-L-1500, D-750, H-750
B-L-1800, D-900, H-750

DIRECTOR DESK

Featherwood

Product Code: FFDD-012
A-L-1500, D-750, H-750
B-L-1800, D-900, H-750

Product Code: FFDD-013
A-L-1500, D-750, H-750
B-L-1800, D-900, H-750

Featherwood

DIRECTOR DESK

Product Code: FFDD-014
A-L-1500, D-750, H-750
B-L-1800, D-900, H-750

Product Code: FFDD-015
A-L-1500, D-750, H-750
B-L-1800, D-900, H-750

Exclusive
Series

GeM
Government
eMarketplace

Featherwood

Exclusive -2
L 2200 x D 1950 x H 750
L 2000 x D 1850 x H 750
L 1800 x D 1750 x H 750

Exclusive -3
L 2400 x D 2175 x H 750
L 2200 x D 2175 x H 750
L 2000 x D 2075 x H 750

Exclusive -4
L 2800 x D 2200 x H 750
L 2600 x D 2100 x H 750

Exclusive -5
L 2250 x D 2180 x H 750
L 2000 x D 2100 x H 750
L 1800 x D 2000 x H 750

Exclusive -7
L 2100 x D 1800 x H 750
L 1950 x D 1700 x H 750
L 1800 x D 1650 x H 750

Exclusive -8
L 2400 x D 2300 x H 750
L 2100 x D 2200 x H 750

Exclusive -9
L 2450 x D 2200 x H 750
L 2250 x D 2100 x H 750

Exclusive -10
L 2300 x D 1950 x H 750
L 2100 x D 1850 x H 750

Exclusive -12
L 1800 x D 2000 x H 750
L 1600 x D 1900 x H 750

Exclusive -13
L 2400 x D 1000 x H 750
L 2000 x D 900 x H 750

Exclusive -14
L 1650 x D 1650 x H 750
L 1800 x D 1730 x H 750
L 2000 x D 1880 x H 750

Classic
Series

GeM
Government
eMarketplace

Featherwood

Classic-2
L 2300 x D 1800 x H 750
L 2100 x D 1800 x H 750
L 1800 x D 1800 x H 750

Classic-4
L 2200 x D 2000 x H 750
L 2000 x D 1900 x H 750

Classic-5
L 2000 x D1880 X H750
L 1800 X D1700 X H750
L 1600 X D1600 X H750

Classic-8
L 1950 x D 2000 x H 750
L 1800 x D 2000 x H 750
L 1650 x D 1900 x H 750

Classic-9
L 1950 x D1800 X H750
L 1800 X D1700 X H750
L 1600 X D1600 X H750

Classic-12
L 1200 x D600 X H750
L 1350 X D750 X H750
L 1500 X D750 X H750

Classic-13
L 1200 x D600 X H750
L 1350 X D750 X H750
L 1500 X D750 X H750

Classic-14
L 1650 X D 750 X H 750

Classic-15
L 1200 X D 600 X H 750
L 1350 X D 750 X H 750
L 1500 X D 750 X H 750

Numero
Series

GeM
Government
eMarketplace

Featherwood

Numero -1
L 1950 x D 2000 x H 750
L 1800 x D 2000 x H 750
L 1650 x D 1900 x H 750

Numero -2
L 1600 x D 700 x H 750
L 1500 x D 700 x H 750
L 1400 x D 700 x H 750

Numero -3
L 1500 x D 750 x H 750
L 1350 x D 600 x H 750
L 1200 x D 600 x H 750

Numero -4
L 2400 x D 2400 x H 750

Numero -5
L 2850 x D 2100 x H 750

Numero -6
L 1950 x D 1750 x H 750
L 1800 x D 1650 x H 750
L 1650 x D 1650 x H 750

Numero -7
L 1500 x D 750 x H 750
L 1350 x D 600 x H 750
L 1200 x D 600 x H 750

Numero -8
L 1500 x D 1650 x H 750

Numero-9
L 1200 X D 600 X H 750
L 1350 X D 750 X H 750
L 1500 X D 750 X H 750

Ambiente
W 3000 X D 1200 X H 750/1100

Imagine 1
W2400 X D1200 X H1050

Oxy 1
W3000 X D3000 X H1050

Polar 1
W3000 X D1500 X H1050

Groove 1
W2400 X D1260 X H1200

Stratum -1
W 3180 x D 3180 x H 1650

Workstations
Series

GeM
Government
eMarketplace

Featherwood

Essence 1
W3060 X D1860 X H1200

Stratum -2
W 3660 x D 3660 x H 1200

Stratum -3
W 2520x D 1260 x H 1200

Dual -1
W 2400x D 1260 x H 1200

Optima -1
W 1100 x D 1100 x H 1050

Optima -5
W 1200 x D 1200 x H 1050

Max -1
W 1320 x D 660 x H 1200

Max -2
W 2580 x D 660 x H 1200

Max -4
W 2520 x D 1260 x H 1200

Max -5
W 4000 x D 1260 x H 1200

Max -6
W 2000 x D 1260 x H 1200

Max -7
W 1560 x D 1560 x H 1200

Conference
Series

GeM
Government
eMarketplace

Featherwood

Conference 15
L 2400 X D 1800 X H 750

Conference 4
L 6000 x D 3000 x H 750

Conference 13
L 7800 x D1800 X H750

Conference 1
L 3600 x D 1200 x H 750
L 3000 x D 1200 x H 750
L 2400 x D 1200 x H 750

Conference 2
L 3600 x D 1200 x H 750
L 3000 x D 1200 x H 750
L 2400 x D 1200 x H 750

Conference 5
L 5400 x D 1500 x H 750
L 4500 x D 1500 x H 750
L 3600 x D 1200 x H 750

Conference 6
L 2700 x D 900 x H 750
L 2100 x D 900 x H 750
L 1800 x D 800 x H 750

Conference 7
L 2100 x D 1200 x H 750
L 1800 x D 900 x H 750

Conference 10
L 3600 x D 1200 x H 750
L 3000 x D 1200 x H 750
L 2400 x D 1200 x H 750

Conference 11
L 3600 x D 1200 x H 750
L 4500 x D 1500 x H 750
L 6000 x D 1800 x H 750

Conference 12
L 2400 x D 1200 x H 750
L 2700 x D 1200 x H 750
L 3600 x D 1200 x H 750

Conference 8
L 1800 x D 900 x H 750
L 1500 x D 750 x H 750

Conference 9
Dia 1200x750 mm
Dia 900x750 mm

Conference 14
Dia 900 x H 750
Dia 1050 x H 750
Dia 1200 x H 750

Reception
Series

GeM
Government
eMarketplace

Featherwood

Reception -1
L 2400 x D 820 x H 1000

Reception -2
L 2400 x D 700 x H 1000

Reception -3
L 1500 x D 600 x H 1000

Reception -4
L 2465 x D 1125 x H 1000

Reception -5
L 1475 x D 780 x H 1000

Computer
Tables

Computer Desk -1
L 1500 x D 750 x H 750

Computer Desk -2
L 1200 x D 600 x H 750

Computer Desk -3
L 1500 x D 750 x H 750

Computer Desk -4
L 1200 x D 600 x H 750

Computer Desk-5
L 1200 x D 600 x H 750

Computer Desk-6
L 800 x D 500 x 750

Pedestal
Series

GeM
Government
eMarketplace

Featherwood

Pedestal -1
W 400 x D 560 x H 540

Pedestal -2
W 440 x D 580 x H 600

Pedestal -3
W 400 x D 450 x H 680

Pedestal -4
W 400 x D 450 x H 680

Pedestal -5
W 400 x D 600 x H 605

Pedestal -6
W 400 x D 450 x H 680

Pedestal -7
W 400 x D 450 x H 680

Pedestal -8
W 400 x D 450 x H 680

Pedestal-9
W 400 x D 450 X H 720

Storage
Series

Storage -1
W 1800 x D 400 x H 2000

Storage -2
W 1200 x D 400 x H 1850

Storage -3
W 1600 x D 550 x H 2000

Storage -4
W 900 x D 450 x H 2000

Storage -5
W 900 x D 450 x H 750

Storage -6
W 900 x D 450 x H 750

Storage -7
W900 X D450 X H900

Pigeon Hole
W900 X D450 X H 2100

Storage -8
W 1800 x D 450 x H 750

Storage -9
W 1500 x D 450 x H 750

Storage -10
W 900 x D 450 x H 2100

Storage -11
W 900 x D 450 x H 1200

CLUSTER OPTION

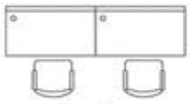
Linear Cluster

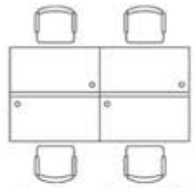
Linear Cluster (Back to Back)

L Shape - Curvilinear Cluster

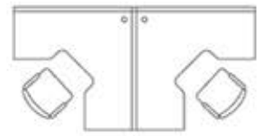
T Shape - Curvilinear Cluster

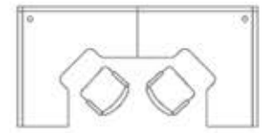
C Shape - Curvilinear Cluster

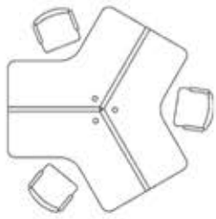
120 Degree Cluster

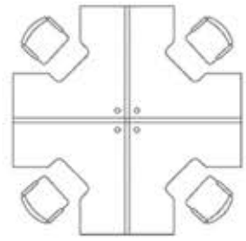
X Shape - Curvilinear Cluster

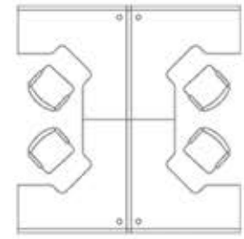
I Shape - Curvilinear Cluster

GABLE OPTION

Gable 1

Gable 2

Gable 3

Gable 4

Gable 5

Gable 6

WORK TOP OPTION

CALL CENTER TOP (TYPE-1)
W1= 1050,1200,1350,1500,1800
D1=450,500,600,750,900
D2=500,600,750,900,1050

CALL CENTER TOP (TYPE-2)
W1=1050,1200,1350,1500,1800
D1=450,500,600,750,900
D2=500,600,750,900,1050

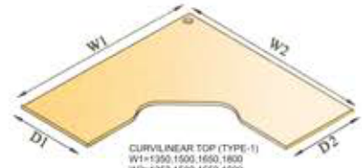

CURVILINEAR TOP (TYPE-1)
W1=1350,1500,1650,1800
W2=1350,1500,1650,1800
D1=450,500,600,750
D2=450,500,600,750

CURVILINEAR TOP (TYPE-3)
W1=1200,1350,1500,1650,1800
W2=1200,1350,1500,1650,1800
D1=450,500,600,750
D2=450,500,600,750

120° CURVILINEAR TOP
W1=1050,1200,1350,1500
W2=1050,1200,1350,1500
D1=450,500,600,750
D2=450,500,600,750

PENINSULA TOP
W1=1050,1200,1350,1500,1650,1800
D1=450,500,600,750,900

Design & Specifications are subject to change without prior notice.

- All sizes mentioned are in MM.
- Accessories & props (Chair etc.) shown in the pictures are not part of product.

Sofa
Series

Lider 1

Lider 3

Viking 1

Viking 3

Admire 1

Admire 3

Sofa
Series

GeM
Government
eMarketplace

Featherwood

Equino 1

Equino 3

Rosemount 1

Rosemount 2

Regal -3

Regal Centre Table
L 1200 X D 1200 X H 410
L 900 X D 900 X H 410
L 600 X D 600 X H 410

Regal Corner Table
L 500 X D 500 X H 550

Scott -1

Sofa
Series

GeM
Government
eMarketplace

Featherwood

Sirena -3

Sirena -2

Sirena -1

Walter -3

Walter -2

Walter -1

Ideal -3

Ideal -2

Ideal -1

Lexia 3

Lexia 2

Lexia 1

Plush - Black

Plush - Brown

Sofa
Series

GeM
Government
eMarketplace

Featherwood

Emerald - 3

Emerald - 2

Emerald - 1

Zap - 3

Zap - 2

Zap - 1

Arc - S Type
(1+1)

Arc - C Type
(1+1)

Arc - D Type
(1+1)

Concord - 3

Concord - 2

Concord - 1

Stanley - 3

Stanley - 2

Stanley - 1

Zyron - 3

Zyron - 2

Zyron - 1

Kevin

Flamingo

Sofa
Series

GeM
Government
eMarketplace

Featherwood

Henley

Questo -1

Questo -2

Aura

Vegas

Chicago

Columbia

Ergo -1

Ergo -3

Fly 1

Fly 2

Fly 3

Fly 4

Sofa
series

GeM
Government
eMarketplace

Featherwood

Cubis - 1

Cubis - 2

Cubis - 3

Magnum - 2

Magnum - 1

Magnum - 4

Magnum - 3

Welmar 3

Welmar 2

Welmar 1

Sofa
series

GeM
Government
eMarketplace

Featherwood

Matrix - 3

Matrix - 2

Maxx - 3

Max Chair A

Max Chair

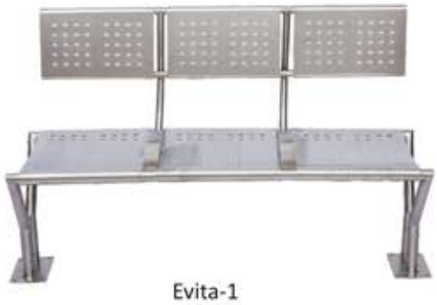

Evita-1

Evita-2

Hamilton - 3

Hamilton - 2

Swing

Centre
Tables

GeM
Government
eMarketplace

Featherwood

Admire Centre Table
L 1200 x W 600 x H 450

Rosemount Centre Table
L 1200 x W 600 x H 430

Viking Corner Table
L 700 x W 700 x H 450

Viking Centre Table
L 1400 x W 700 x H 450

Walter Centre Table
L 1200 X W 600 X H 420

Ideal Centre Table
L 1200 X W 600 X H 450
L 600 X W 600 X H 450

Lider Centre Table
L 1200 x W 750 x H 410

Lider Corner Table
L 750 x W 750 x H 550

Regal Centre Table
L 1200 X W 1200 X H 410
L 900 X W 900 X H 410
L 600 X W 600 X H 410

Club Centre Table
L 1200 X W 600 X H 430

Club Corner Table
L 600 X W 600 X H 430

Zyron

Recta

Galaxy

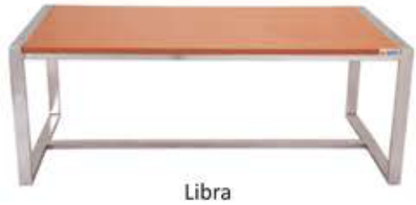

Libra

Café
series

GeM
Government
eMarketplace

Featherwood

GC 9056

GC 9057

GC 9058

GC 9059

GC 9060

GC 9061

GC 9062

GC 9063

GC 9064

GC 9001

GC 9002

GC 9003

GC 9004

GC 9005

GC 9006

GC 9007 (Table Only)

GC 9008

GC 9009

GC 9010

GC 9011

GC 9012

GC 9014

GC 9016

GC 9019

GC 9020

Café
series

GeM
Government
eMarketplace

Featherwood

GC 9023

GC 9024

GC 9025

GC 9026

GC 9027

GC 9028 (Table Only)

GC 9030

GC 9031

GC 9032

GC 9033

GC 9034

GC 9035

GC 9036

GC 9037 GC 9038 GC 9039

GC 9040

GC 9041

GC 9042

GC 9044

Café
series

GeM
Government
eMarketplace

Featherwood

GC 9046

GC 9049

GC 9052

GC 9053

GC 9054

GC 9055

GC 903 A

GC 904

GC 905

GC 911

GC 919

GC 921

GC 928

GC 936

GC 938

GC 940

GC 941

GC 942

GC 943

GC 944

GC 947

GC 948

GC 949

GC 950

GC 951

Café
series

GeM
Government
eMarketplace

Featherwood

GC 953

GC 954

GC 955

GC 956 (Table Only)

GC 960

GC 961

GC 962

GC 965

GC 970

GC 975

GC 976

GC 984

GC 985

GC 986 (SS Frame)

GC 987

GC 988

GC 989

GC 991

GC 994

Kruze 1

Kruze 2

Kruze 4

Student
series

GeM
Government
eMarketplace

Featherwood

GST 801

GST 802

GST 803

GST 804

GST 805

GST 807

GST 808

GST 809

GST 810

GST 811

GST 812

GST 813

GST 814

GST 818

GST 820

GST 821

GST 823

GST 825

GST 826

GST 827

Task 1

Task 2

Task 3

Task 4

Note : We would need a minimum order quantity of 400 pcs. each for different colors other than grey for model Nos. GST 821 & GST 827.

Student
series

GeM
Government
eMarketplace

Featherwood

Task 5

Task 6

Task 7

Student 1

Student 2

Student 3

Student 4

Student 5

Student 6

Student 7

Student 8

Student 9

Note : We would need a minimum order quantity of 400 pcs. each for different colors other than grey for model Nos. Student 8 & Student 9.

Auditorium
series

GeM
Government
eMarketplace

Featherwood

Audi 1

Audi 2

Audi 5

Audi 6

Audi 7

Audi 8

Audi 9

Audi 10

Audi 11

Audi 12

Hostel Beds

Hostel 1

Hostel 2

Hostel 4

Steel
series

34
Steel Almirah (2 Doors)
(2 Adjustable Shelves, 1 Locker)
Thickness 0.8mm
W 915 X D 485 X H 2000 mm

35
Steel Almirah (2 Doors)
(1 Hanging Rod, 1 Adjustable
Shelf, 1 Locker, 2 Drawer)
Thickness 0.8mm
W 1065 X D 585 X H 2000 mm

36
Steel Almirah (2 Doors)
(1 Hanging Rod, 1 Locker,
2 Drawer) Thickness 0.8mm
W 1065 X D 585 X H 2000 mm

37
Steel Almirah (2 Doors)
(1 Hanging Rod, 1 Adjustable
Shelf, 1 Locker) Thickness 0.8mm
W 915 X D 530 X H 2000 mm

38
Steel Almirah (2 Doors)
(2 Adjustable Shelves,
1 Locker) Thickness 0.8mm
W 915 X D 485 X H 2000 mm

39
Steel Almirah (2 Doors)
(4 Adjustable Shelves)
Thickness 0.8mm
W 900 X D 450 X H 1830 mm

40
Steel Almirah (2 Doors)
(1 Hanging Rod,
1 Adjustable Shelf, 1 Locker)
Thickness 0.8mm
W 1065 X D 585 X H 2000 mm

41
Steel Almirah (2 Doors)
(4 Adjustable Shelves)
Thickness 0.8mm
W 915 X D 485 X H 1980 mm

42
Steel Almirah (2 Glass Sliding Doors)
(2 Adjustable Shelves)
(2 Swing Doors)
(2 Adjustable Shelves)
Thickness 0.8mm
W 915 X D 455 X H 1850 mm

43
Steel Almirah (2 Glass Doors)
(4 Adjustable Shelves)
Thickness 0.8mm
W 915 X D 485 X H 1980 mm

Steel
series

GeM
Government
eMarketplace

Featherwood

44
Steel Almirah (2 Doors)
(2 Adjustable Shelves)
Thickness 0.8mm
W 900 X D 400 X H 1125 mm

45
Steel Personal Locker
(2 Separate Doors for Individual use)
(1 Hanging Rod)
(1 Adjustable Shelf, 1 fixed shelf)
Thickness 0.8mm
W 900 X D 500 X H 1870 mm

46
Steel Personal Locker
(2 Separate Doors for Individual use)
(1 Hanging Rod)
(1 Adjustable Shelf, 1 fixed shelf)
Thickness 0.8mm
W 900 X D 500 X H 1870 mm

47
Vertical Filing Cabinet
2 Drawer - W 440 X D 620 X H 710 mm
3 Drawer - W 440 X D 620 X H 1000 mm
4 Drawer - W 440 X D 620 X H 1310 mm
Thickness 0.8mm

48
Steel Overhead Unit
(2 Swing Doors)
Thickness 0.8mm
W 900 X D 400 X H 350 mm

49
Steel Mobile Pedestal
(2 Drawers, 1 Filing)
Thickness 0.8mm
W 395 X D 550 X H 595 mm

50
Steel Mobile Pedestal
(2 Drawers, 1 Filing)
Thickness 0.8mm
W 395 X D 550 X H 595 mm

51
Steel Personal Locker
(2 Doors)
(1 Hanging Rod)
Thickness 0.8mm
W 380 X D 450 X H 1800 mm

52
Steel Personal Locker
(4 Doors)
Thickness 0.8mm
W 380 X D 450 X H 1800 mm

Steel
series

GeM
Government
eMarketplace

Featherwood

1
Vertical Filing Cabinet
(4 Drawer)
W 470 X D 620 X H 1320 mm
Thickness 0.8 mm

2
Vertical Filing Cabinet
(3 Drawer)
W 470 X D 620 X H 1040 mm
Thickness 0.8 mm

3
Vertical Filing Cabinet
(2 Drawer)
W 470 X D 620 X H 710 mm
Thickness 0.8 mm

7
Lateral Filing Cabinet
(4 Drawer)
W 900 X D 450 X H 1325 mm
Thickness 0.8 mm

8
Lateral Filing Cabinet
(3 Drawer)
W 900 X D 450 X H 1040 mm
Thickness 0.8 mm

9
Lateral Filing Cabinet
(2 Drawer)
W 900 X D 450 X H 715 mm
Thickness 0.8 mm

10
Steel Almirah (2 Doors)
(4 Adjustable Shelves)
W 900 x D 450 x H 1830 mm
Thickness 0.8 mm

11
Steel Almirah (4 Doors)
(Adjustable Shelves)
W 900 x D 450 x H 1830 mm
Thickness 0.8 mm

Steel
series

GeM
Government
eMarketplace

Featherwood

12
Steel Almirah (2 Glass &
2 Steel Doors)
(Adjustable Shelves)
W 900 x D 450 x H 1830 mm
Thickness 0.8 mm

13
Steel Almirah (2 Glass &
2 Steel Doors, 2 Drawer)
(Adjustable Shelves)
W 900 x D 450 x H 1830 mm
Thickness 0.8 mm

14
Steel Almirah (2 Doors)
(4 Adjustable Shelves)
W 915 x D 485 x H 1980 mm
Thickness 0.8 mm

15
Steel Almirah (2 Doors)
(2Adjustable Shelves)
W 900 x D 450 x H 930 mm
Thickness 0.8 mm

16
Steel Almirah (2 Doors)
(1 Adjustable Shelf)
W 900 x D 450 x H 730 mm
Thickness 0.8 mm

17
Steel Library Rack
(Double Face)
W 940 x D 600 x H 2110 mm
Thickness 0.8 mm

18
Steel Library Rack
(Single Face)
W 925 x D 300 x H 1800 mm
Thickness 0.8 mm

19
Metal Book Case
(4 Doors)
W 915 x D 320 x H 1750 mm
Thickness 0.8 mm

20
Steel Slotted Angle Rack
W 900 x D 300 x H 1800 mm
W 900 x D 450 x H 1800 mm
W 900 x D 600 x H 1800 mm

21
Steel Personal Locker
(6 Doors)
W 900 x D 450 x H 1830 mm
Thickness 0.8 mm

22
Steel Personal Locker
(4 Doors)
W 900 x D 450 x H 1830 mm
Thickness 0.8 mm

23
Mobile Pedestal
(2 Drawer, 1 Filing)
W 400 x D 560 x H 560 mm
Thickness 0.8 mm

24
Fix Pedestal
(2 Drawer, 1 Filing)
W 390 x D 590 x H 645 mm
Thickness 0.8 mm

Steel
series

GeM
Government
eMarketplace

Featherwood

GMS 25
Steel Almirah (2 Doors)
(4 Adjustable Shelves)
W 915 x D 485 x H 1980 mm
Thickness 0.8 mm

GMS 26
Steel Almirah (2 Doors)
(2 Adjustable Shelves)
W 915 x D 485 x H 1200 mm
Thickness 0.8 mm

GMS 27
Steel Personal Locker
W 1520 x D 450 x H 1800 mm
Thickness 0.8 mm

GMS 28
Filing Cabinet
(2 & 3 Drawer)
2 Drawer - W 660 x D 450 x H 760 mm
3 Drawer - W 660 x D 450 x H 1060 mm
Thickness 0.8 mm

GMS 29
Steel Almirah (2 Doors)
(1 Adjustable Shelf)
Thickness 0.8mm
W 900 X D 450 X H 750 mm

GMS 30
Lateral Filing Cabinet (3 Drawers)
Thickness 0.8mm
W 900 X D 450 X H 900 mm

GMS 31
Steel Mobile Pedestal
(2 Drawers, Wooden Facia)
Cushion Seat
Thickness 0.8mm
W 400 X D 450 X H 600 mm

GMS 32
Steel Mobile Pedestal
(2 Drawers, Wooden Facia)
Cushion Seat
Thickness 0.8mm
W 400 X D 430 X H 585 mm

GMS 33
Steel Mobile Pedestal
(2 Drawers, 1 Filing)
Thickness 0.8mm
W 390 X D 435 X H 675 mm

Laboratory Table

Series

GeM
Government
eMarketplace

Featherwood

Lab 1
(With Island Unit)
L 2500 x D 1500 x H 900

Lab 2
(Wall Side Unit)
L 2500 x D 750 x H 900

Lab 3
Lab Table Single Side with Reagent Shelf & Sink
Size : L 2480 x D 770 x H 900

Lab 4
Lab Table Single Side with Reagent Shelf & Sink
Size : L 3680 x D 770 x H 900

Lab 5
Lab Table Single Side with Reagent Shelf & Sink
Size : L 4880 x D 770 x H 900

Lab 6
Lab Table Double Side with Reagent Shelf & Sink
Size : L 2480 x D 1540 x H 900

Note: In the products shown above, the Granite top will have joints

Laboratory Table
Series

Lab 7
Lab Table Double Side with Reagent Shelf & Sink
Size : L 3680 x D 1540 x H 900

Lab 8
Lab Table Double Side with Reagent Shelf & Sink
Size : L 4880 x D 1540 x H900

Lab 9
Lab Table Single Side with Electrical Trunking.
Size : L 2480 x D 770 x H 900

Lab 10
Lab Table Single Side with Electrical Trunking.
Size : L 3680 x D 770 x H 900

Lab 11
Lab Table Single Side with Electrical Trunking.
Size : L 4880 x D 770 x H 900

Lab 12
Lab Table Double Side with Electrical Trunking.
Size : L 2480 x D 1540 x H 900

Lab 13
Lab Table Double Side with Electrical Trunking.
Size : L 3680 x D 1540 x H 900

Lab 14
Lab Table Double Side with Electrical Trunking.
Size : L 4880 x D 1540 x H 900

Note: In the products shown above, the Granite top will have joints

Organise Compactor
Series

GeM
Government
eMarketplace

Featherwood

Optimize the space

Mobile storage systems are three times more space efficient than conventional filing and shelving at half the cost.

When storage needs outgrow available space, the problem usually tackled with a move to larger premises, an expensive option. But there is an alternative, you can increase storage efficiently with a mobile shelving system, that :

A. Saves Money

B. Boost Efficiency

C. Improves your Working Environment

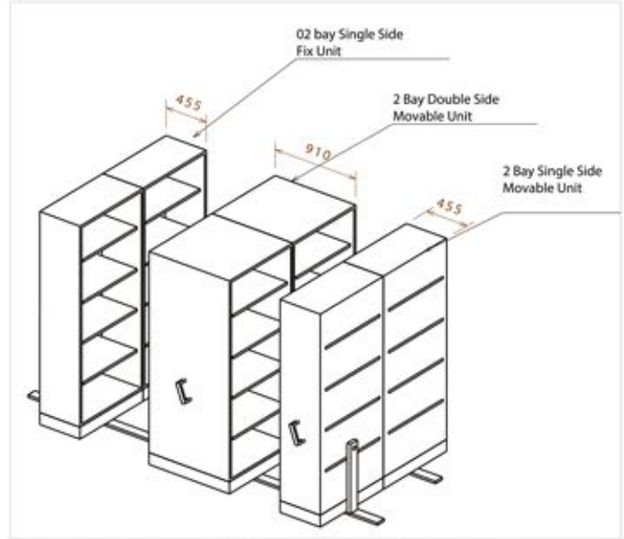

ORGANISE -4 TWO BAY (PUSH PULL TYPE)

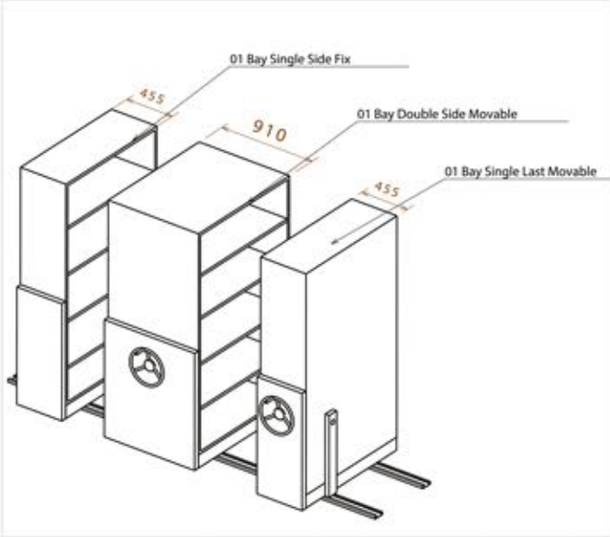

ORGANISE -5 ONE BAY (DRIVE TYPE)

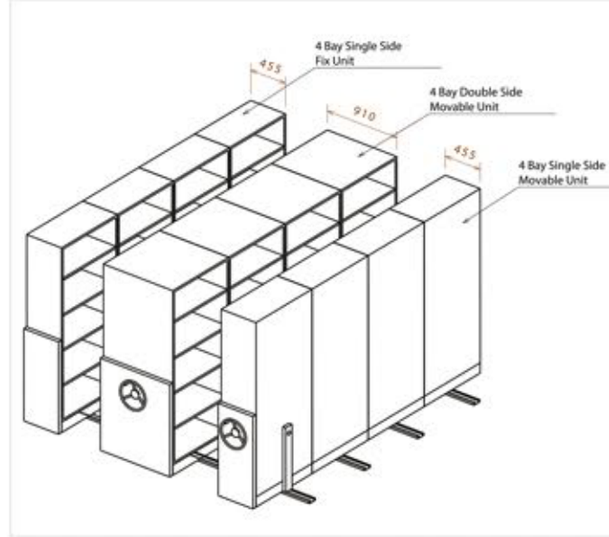

ORGANISE -7 FOUR BAY (DRIVE TYPE)

Organise Compactor
Series

GeM
Government
eMarketplace

Featherwood

Push Pull Type Compactors

The system can be opened by pushing handles left or right. Ideal for smaller, low activity, limited-access storage areas.

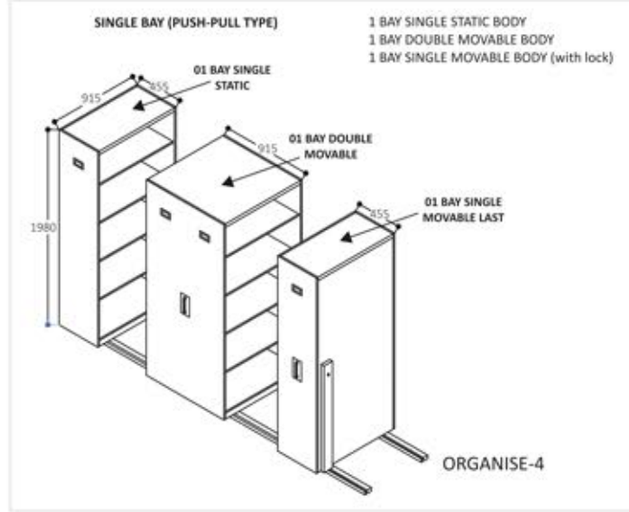

Drive Type Compactors

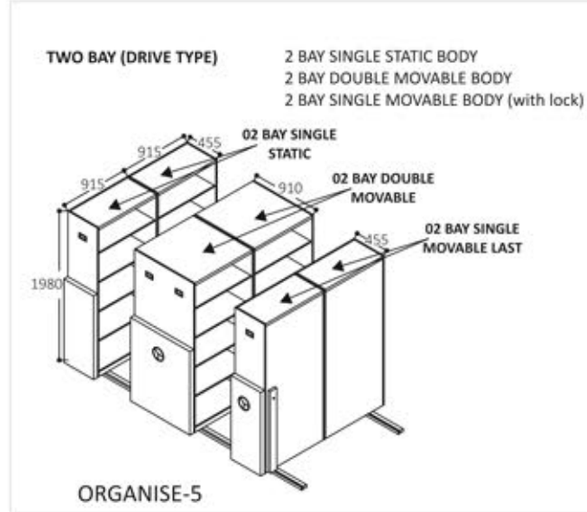

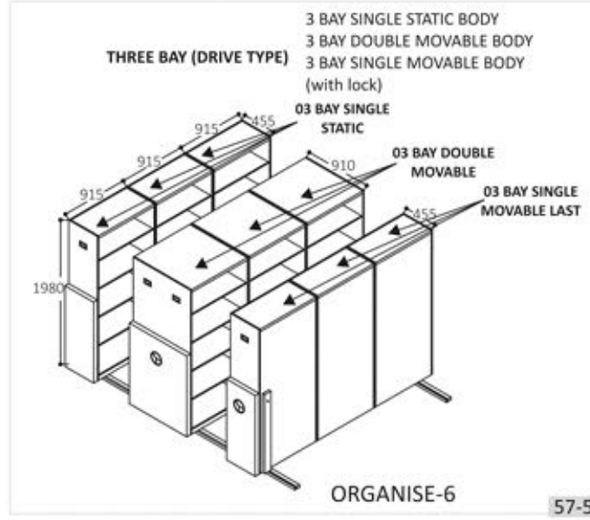

The system can be opened by rotating ergonomically designed handles. Ideal for medium-sized storage system with higher activity levels, heavier load factors, great carriage lengths and a larger number of system ranges.

*The images of the compactors shown here are for reference purpose only, the actual product may vary in finish and colors

Hospital
Furniture Series

GeM
Government
eMarketplace

Featherwood

FW 1003
FOWLER BED POLYMER PANELS

FW 1004
FOWLER BED S.S PANELS

FW 1005
SEMI-FOWLER BED POLYMER PANELS

FW 1006
SEMI-FOWLER BED S.S PANELS

FW 1008
PEDIATRIC GENERAL BED

FW 1007
BASIC STEEL BED

Hospital
Furniture Series

GeM
Government
eMarketplace

Featherwood

FW 1010
BABY CRIB

FW 1009
PLAIN BED WITH MATTRESS

FW 7000
MOTORISED EXAMINATION COUCH

FW 7002
EXAMINATION COUCH DELUXE

FW 7003
EXAMINATION COUCH

FW 7004
GYNAE EXAMINATION TABLE DLX. S.S

Hospital
Furniture Series

GeM
Government
eMarketplace

Featherwood

FW 7005
GYNAE EXAMINATION TABLE DLX. M.S

FW 7006
GYNAE EXAMINATION TABLE BASIC

FW 7007
HOSPITAL EXAMINATION TABLE

FW 8000
EMERGENCY & RECOVERY TROLLEY

FW 8001
S.S STRETCHER DELUXE

FW 8002
M.S. STRETCHER DELUXE

Hospital
Furniture Series

GeM
Government
eMarketplace

Featherwood

FW 8003
S.S STRETCHER TROLLEY BASIC

FW 8004
S.S TOP STRETCHER TROLLEY BASIC

FW 8005
M.S STRETCHER TROLLEY BASIC

FW 8006
WHEEL CHAIR FIXED

FW 5000
LABOUR TABLE SS

FW 5001
LABOUR TABLE SS TOP

Hospital
Furniture Series

GeM
Government
eMarketplace

Featherwood

FW 3000
CRASH CART SS

FW 3002
MEDICINE TROLLEY SS

FW 3011
MONITOR TROLLEY SS

FW 3012
MONITOR TROLLEY MS

FW 3001
OT DRUG TROLLEY

FW 3003
ECG TROLLEY

FW 3004
SUCTION MACHINE TROLLEY

FW 3005
INSTRUMENT TROLLEY

FW 3007
DRESSING TROLLEY

FW 3009
MAYO TROLLEY SS

FW 4012
BASIN STAND SINGLE

FW 4013
KICK BUCKET

FW 4014
THREE FOLD SCREEN MS

FW 4015
FOUR FOLD SCREEN MS

FW 2000
BED SIDE LOCKER
MEMBRANE TOP

FW 2001
BED SIDE LOCKER SS TOP

Hospital
Furniture Series

GeM
Government
eMarketplace

Featherwood

FW 2002
BED SIDE LOCKER GENERAL

FW 2004
OVER BED TABLE SS
WITH MEMBRANE TOP

FW 2005
OVER BED TABLE MS
WITH MEMBRANE TOP

FW 2006
OVER BED TABLE MS BASIC
WITH MEMBRANE TOP

FW 4000
REVOLVING STOOL
CUSHIONED TOP

FW 4002
REVOLVING STOOL
SS TOP

FW 4004
BED SIDE STOOL

FW 4005
DOUBLE FOOT STEP SS

FW 4006
DOUBLE FOOT STEP MS

FW 4007
SINGLE FOOT STEP SS

FW 4008
SINGLE FOOT STEP MS

FW 4009
SALINE STAND SS BASE
AND SS ROD

FW 4010
SALINE STAND NYLON
BASE AND SS ROD

FW 4011
OXYGEN CYLINDER
TROLLEY MS

FW 6009
SOILED LINEN TROLLEY SS

Featherwood

OUR VALUABLE CLIENTS

OTEL On Time GROUP

ORANGE RENEWABLE

netscribes RETURN ON KNOWLEDGE

Lilly

LANCO Always Inspiring

JRD International Ltd. Built for your health

GABRIEL

Shahi Exports Pvt. Ltd.

State of Qatar

RGCB RAJIV GANDHI CENTRE FOR BIOTECHNOLOGY

ROYAL REGENCY HOTEL

ERICSSON

BOLLORÉ LOGISTICS

Ajanta Chemical Industries (An ISO 9001:2008 & HACCP Certified Company)

AIRCEL

MANAV HOSPITAL

British Paints

TEXPROCIL THE COTTON TEXTILES EXPORT PROMOTION COUNCIL

Indian Spinal Injuries Centre

SHASTRI INDO-CANADIAN INSTITUTE L'INSTITUT INDO-CANADIEN

ATS The better way home.

Featherwood

SINCE A LONG TIME

Meril Life Sciences — Decoding Life
FMHOUSE®
Zahonero — Engineering comfort
USIEF
Aga Khan Foundation — An agency of the Aga Khan Development Network
JK Cement Ltd.
IRCTC — Indian Railway Catering and Tourism Corporation Limited
fusionnet
Parametrique
Spark Minda
TPSC India
D-Link — Building Networks for People
Cartier
गेल GAIL
Amul — The Taste of India
velocis
PMTC
Hero
Uniworld Logistics — Perfecting Solutions
SkyJet Airlines
FESTO

GeM

Government

eMarketplace

Featherwood

FEATHERWOOD FURNITURE PVT LTD

Featherwood

Spacewood

CONTACT FOR DEALERSHIP

Office Add: Plot No. 17, GF-2, Nyay Khand- I, Indirapuram, Ghaziabad, UP-201014

Factory Add : C-82, Sector 65, Noida, UP. 201301

+91 120-7966010

+91-9810209065, 9810017718, 9717792837

info@featherwoodfurniture.com

www.featherwoodfurniture.com